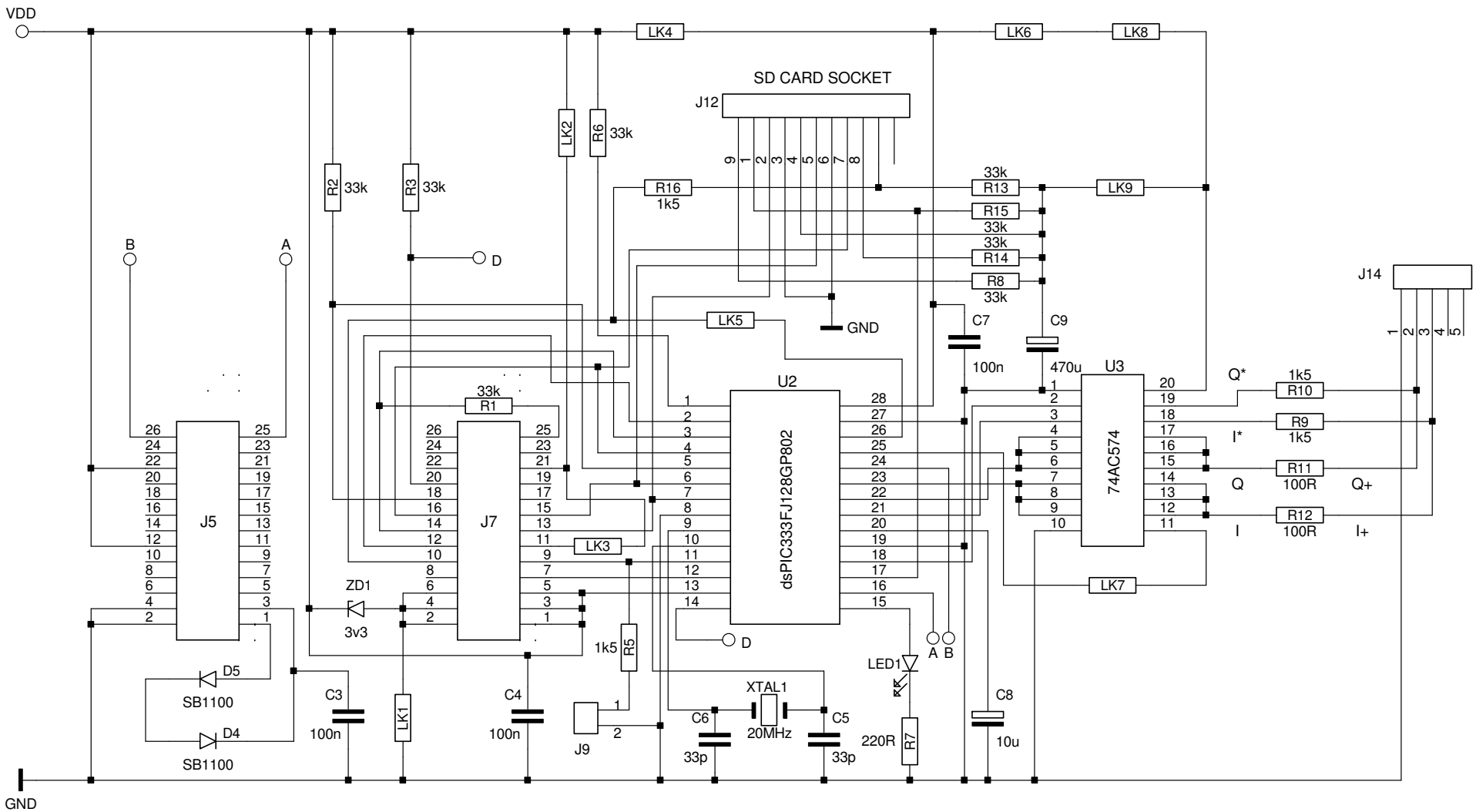

DIGILITE SERIALISER

DTU1141 BUILD A2 19 JUNE 2011

G4EWJ@MEM.BATC.ORG.UK

THE UNIT IS POWERED FROM THE PC VIA THE USB SOCKET
J5 AND J7 ARE THE SOCKETS FOR THE FT2232H USB MODULE
USE LINKS TO CONNECT A-A, B-B, D-D
R9 / R10 AND R11 / R12 SHOULD BE CLOSELY MATCHED TO EACH OTHER
NOTE THE UNUSUAL NUMBERING ON THE SD CARD SOCKET
COMPONENTS NOT FITTED ON THE PCB ARE NOT SHOWN